Particle Physics and Cosmology III: Acceleration, Gravity & Extra Dimensions

Mark Trodden
Center for Particle Cosmology
University of Pennsylvania

Problems of Modern Cosmology

Why is the cosmological constant so small?

Is cosmic acceleration a signal of a breakdown of GR?

What is driving cosmic acceleration?
LECTURE III

Motivates more careful tests of GR on all scales

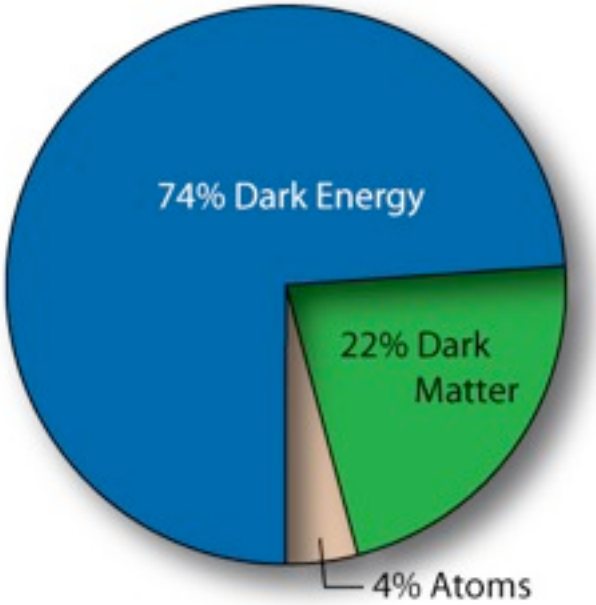

What is the nature of dark matter?
LECTURE II

What laid down its primordial perturbations?

Why is there more matter than antimatter?
LECTURE I

Lecture III: Outline

- Motivations - modified gravity and cosmic acceleration
  - Extra degrees of freedom and their problems
- The continuing extra dimensions story
  - Induced gravity and the DGP model
  - Tests and cosmology
- Are the more general lessons we can learn
  - The Galileons, features and usefulness.
  - Higher dimensional implementations.
- The cutting edge ...

Are we Being Fooled by Gravity?

(Carroll, De Felice & M.T., *Phys.Rev.* **D71:** 023525 (2005) [astro-ph/0408081])

We don't *really* measure w - we infer it from the Hubble plot via

$$w_{eff} = -\frac{1}{1-\Omega_m}\left(1+\frac{2}{3}\frac{\dot{H}}{H^2}\right)$$

Maybe, if gravity is modified, can infer value not directly related to energy sources (or perhaps without them!)

One example - Brans-Dicke theories

$$S_{BD} = \int d^4x\sqrt{-g}\left[\phi R - \frac{\omega}{\phi}\left(\partial_\mu\phi\right)\partial^\mu\phi - 2V(\phi)\right] + \int d^4x\sqrt{-g}L_m(\psi_i, g)$$

ω>40000 (Signal timing measurements from Cassini)

We showed that (with difficulty) can measure w<-1, even though no energy conditions are violated.

Modifying Gravity

There are really three ingredients that go into GR

- A metric theory that is generally covariant - physics doesn't depend on the coordinate system.
    - Generally we keep this.
- Matter content - baryons, radiation, dark matter. This is where you need to add dark energy in GR
    - Sometimes try to do without dark energy altogether.
- An action principle (including dimensionality) - tells us differential equations metric obeys, and which degrees of freedom it contains turn out to be physical
    - For the most part, we'll be changing this.

Counting Degrees of Freedom

Before we start playing with actions, let's ask: what degrees of freedom does the metric $g_{\mu\nu}$ contain in general?

(Decompose as irreducible repns. of the Poincaré group.)

$$g_{\mu\nu}$$

The graviton:
a spin 2 particle

$$h_{\mu\nu}$$

We're familiar with this.

$$A_\mu$$

A vector field:
a spin 1 particle

Scalar fields:
spin 0 particles

$$\phi$$

These are less familiar. Certainly we don't see them in GR. How come?

Propagating Degrees of Freedom

Which d.o.f.s propagate depends on the action.

In GR, the action is the Einstein-Hilbert action

$$S_{EH} = \frac{M_p^2}{2} \int d^4x \sqrt{-g}\, R$$

Its resulting equations of motion - the Einstein equations - contain constraints, similar to Gauss' law.

These pin the vector A_μ and scalar ϕ fields, making them non-dynamical, and leaving only the familiar graviton $h_{\mu\nu}$

Almost any other action will free up ϕ and/or A_μ or more!

$$S_{EH}$$

Einstein-Hilbert
-gravitons

Modified gravity
-gravitons + new degrees of freedom

Issues with new d.o.f. - I

A number of different problems can arise with these new degrees of freedom.

- GR is very well tested in the solar system. The new fields can change the paths of light.
- Some of the best tests from Shapiro time delay from the Cassini spacecraft
- Any proposed modification to GR needs to deal with this.
- Lensing measurements can push this out to larger scales.

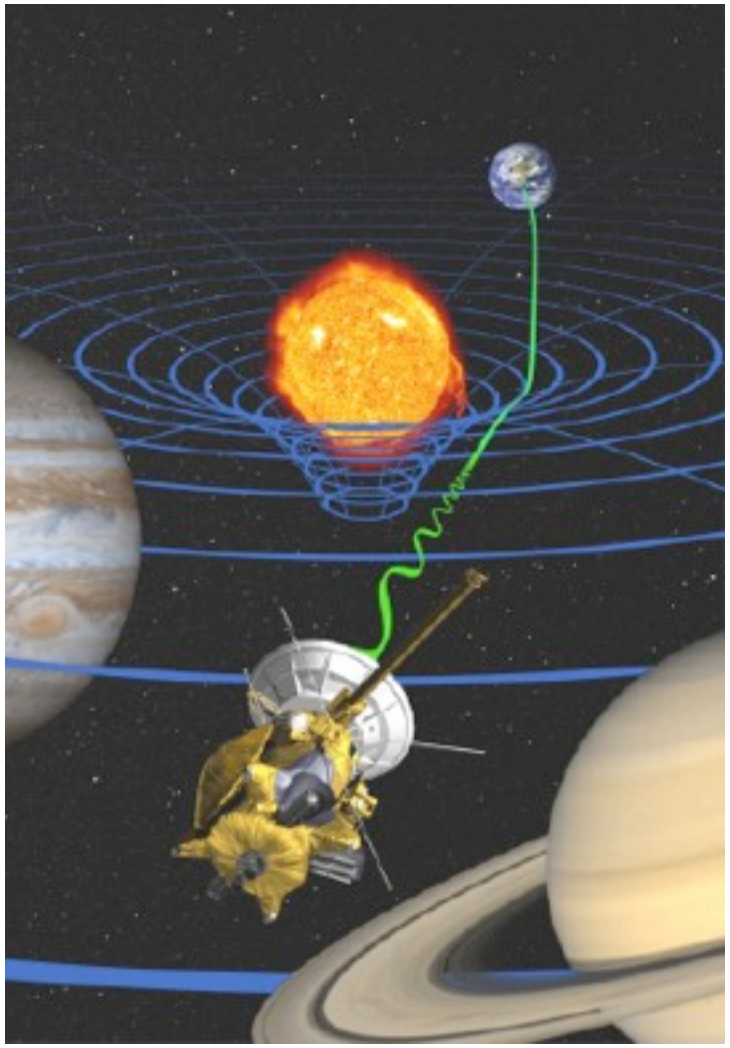

Issues with new d.o.f. - II

Another problem is that they can lead to instabilities because they are ghost-like (have the wrong sign kinetic terms.)

If we were to take these seriously, they'd have negative energy!!

- Ordinary particles could decay into heavier particles plus ghosts

(Carroll, Hoffman & M.T., *Phys.Rev.* **D68:** 023509 (2003) [astro-ph/0301273])

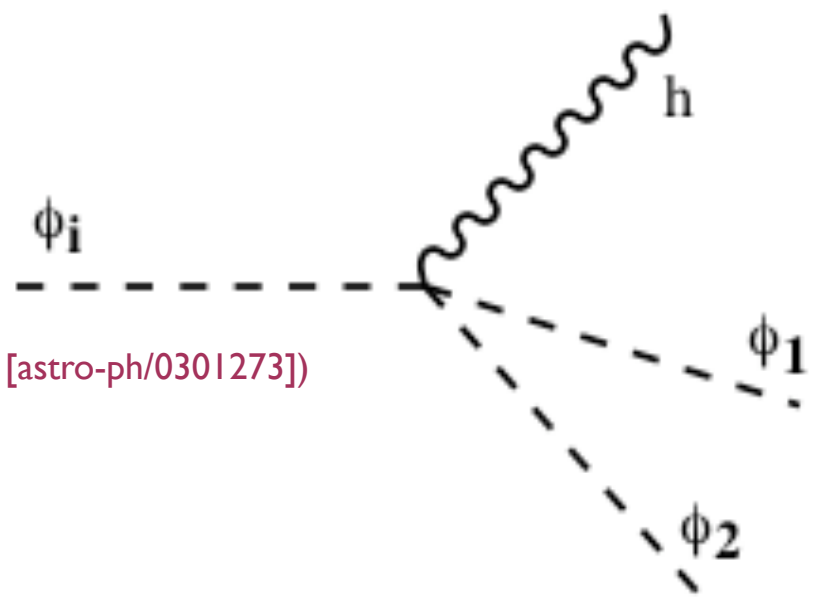

- Thus, the vacuum could fragment on microscopic timescales

(Cline, Jeon & Moore. (2004))

f(R) Gravity

(Carroll, Duvvuri, M.T. & Turner, *Phys.Rev.* **D70:** 043528 (2004) [astro-ph/0306438])

Consider modifying the Einstein-Hilbert action

$$S = \frac{M_P^2}{2} \int d^4x \sqrt{-g} f(R) + \int d^4x \sqrt{-g} L_m$$

The physics is in the new d.o.f.

This action frees up precisely one of those new degrees of freedom we talked about - the scalar, as Ed described

As Ed also showed, agreeing with solar system tests is a major challenge in constructing meaningful models of this type - our original model has such issues.

More General Actions

(Carroll, De Felice, Duvvuri, Easson, M.T. & Turner, *Phys.Rev.* **D71:** 063513 (2005) [arXiv:astro-ph/0410031])

$$S = \frac{M_P^2}{2}\int d^4x\,\sqrt{-g}\,f(R, R_{\mu\nu}R^{\mu\nu}, R_{\mu\nu\rho\sigma}R^{\mu\nu\rho\sigma}, \ldots) + \int d^4x\,\sqrt{-g}L_m$$

Unlike f(R) models, it turn out to be relatively easy to satisfy solar system constraints in models like this - one can use the Riemann tensor, which doesn't essentially vanish in the solar system, whereas R does.

However

While f(R) models are ghost free, except for some very special examples, at least one d.o.f. freed up by these actions is a ghost!

(e.g. De Felice, Hindmarsh and M.T., JCAP 0608:005, (2006) [astro-ph/0604154])

This is bad!

I've been telling you about these extra degrees of freedom and their potential problems for two reasons:

- It highlights the pitfalls of modifying gravity
- It suggests that we might seek models where dynamics and degrees of freedom arise from "more fundamental" constructions.

(and tells you the things to look out for even there)

Guidance from Extra Dimensions

Recall the Randall-Sundrum model

$$R^4 \otimes S^1/Z_2$$

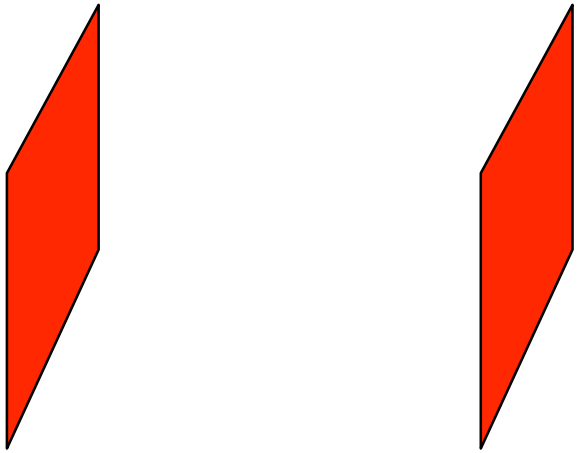

$$ds^2 = e^{-k|y|}(g_{\mu\nu}(x^\alpha)dx^\mu dx^\nu) + dy^2$$

Can explain hierarchy with fairly natural size of extra dimension.

Can modify this, live on other brane and ... then live in an *infinite* extra dimension! (forget hierarchy problem here).

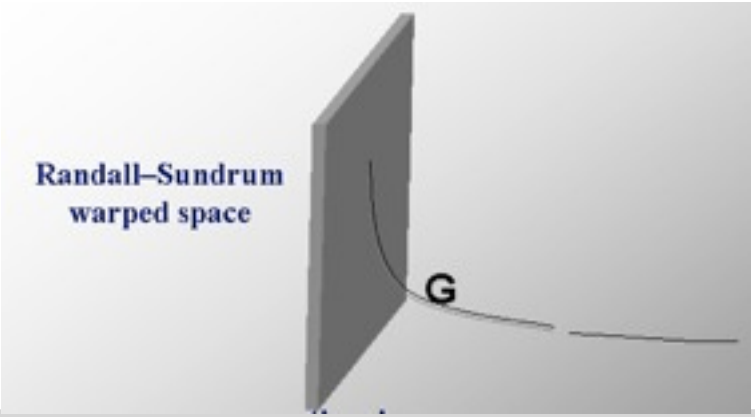

Interesting New Point

(Dvali, Gabadadze & Porrati)

Even if just put 5d gravity and brane matter in space, will induce an Einstein-Hilbert term on brane.

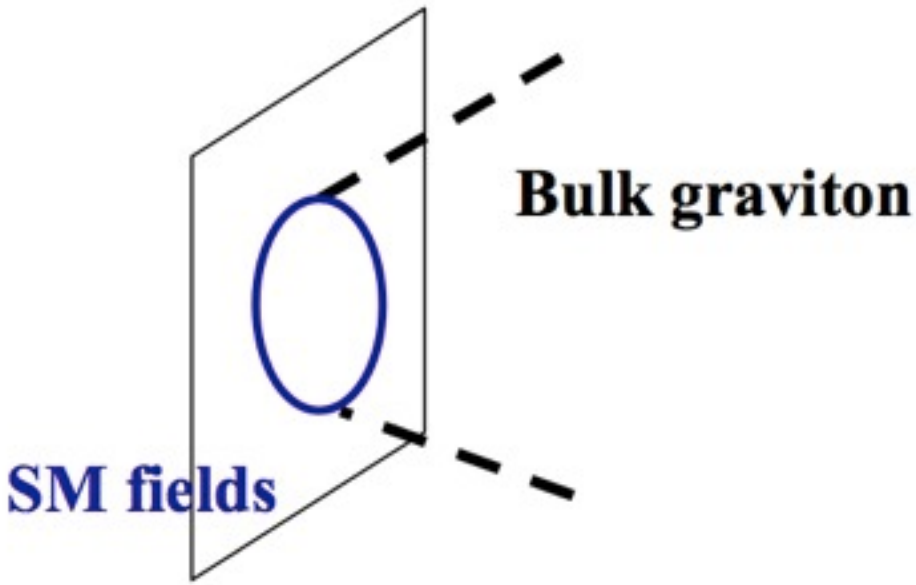

- On *small* scales get 4d gravity
- On *large* scales start to see 5d effects

$$S = \frac{M_5^3}{2r_c}\int d^5x\sqrt{-G}\ R^{(5)} + \frac{M_4^2}{2}\int d^4x\sqrt{-g}\ R$$

DGP Braneworlds

(Dvali, Gabadadze & Porrati; Deffayet)

$$S = \frac{M_5^3}{2r_c}\int d^5x\sqrt{-G}\ R^{(5)} + \frac{M_4^2}{2}\int d^4x\sqrt{-g}\ R$$

(crossover scale r_c)

$$r_c \equiv \frac{M_4^2}{2M_5^3}$$

"Friedmann" equation

$$H^2 = \frac{8\pi G}{3}\rho_{matter} + \frac{1}{r_c}\sqrt{\frac{1}{r_c^2} + \frac{32\pi G}{3}\rho_{matter}} + \frac{1}{2r_c^2}$$

- Gravity "leaks into extra dimensions at large scales, leading to additional dimming of supernovae
- New force law from exchange of continuum of massive gravitons (related to Fierz-Pauli massive gravity).
- **But**: Seems to have its own ghost problems to be tackled

The Decoupling Limit

Much of interesting phenomenology of DGP captured in the *decoupling limit*:

$$M_4,\ M_5 \to \infty \qquad \Lambda_{\rm strong} \equiv (M_4 r_c^{-2})^{1/3}$$ kept finite

$$\mathcal{L}_{\rm decouple} = -\frac{M_4^2}{4} h^{\mu\nu}(\mathcal{E}h)_{\mu\nu} - 3(\partial\pi)^2 - \frac{r_c^2}{M_4}(\partial\pi)^2\Box\pi + \frac{1}{2}h^{\mu\nu}T_{\mu\nu} + \frac{1}{M_4}\pi T$$

Very special symmetry, inherited from combination of:

- 5d Poincare invariance, and
- brane reparameterization invariance

$$\pi(x) \to \pi(x) + c + b_\mu x^\mu$$

The *Galilean* symmetry!

Galileons

Can consider this symmetry as interesting in its own right

- Yields a novel and fascinating 4d effective field theory
- Relevant field referred to as the *Galilean*

(Nicolis, Rattazzi, & Trincherini 2009)

What kinds of 4d terms can we write down that have:

- The Galilean symmetry, and
- Second order equations of motion?

Rough form of a general term is:

$$\mathcal{L}_n \sim \partial\pi\,\partial\pi\,(\partial^2\pi)^{n-2}$$

Details are in the tensor structure ...

To be Specific ...

The Galilean terms take the form

$$\mathcal{L}_{n+1} = n\eta^{\mu_1\nu_1\mu_2\nu_2\cdots\mu_n\nu_n}\left(\partial_{\mu_1}\pi\partial_{\nu_1}\pi\partial_{\mu_2}\partial_{\nu_2}\pi\cdots\partial_{\mu_n}\partial_{\nu_n}\pi\right)$$

$$\eta^{\mu_1\nu_1\mu_2\nu_2\cdots\mu_n\nu_n} \equiv \frac{1}{n!}\sum_p (-1)^p\,\eta^{\mu_1 p(\nu_1)}\eta^{\mu_2 p(\nu_2)}\cdots\eta^{\mu_n p(\nu_n)}$$

- tensor is anti-symmetric in μ indices,
- anti-symmetric in ν indices, and
- symmetric under interchange of any μ, ν pair with any other

- Only first n of galileons terms non-trivial in n-dimensions.
- In addition, the tadpole term, π, is galilean invariant - include as the first-order galileon.

In 3+1 Dimensions

$$\mathcal{L}_1 = \pi$$

$$\mathcal{L}_2 = (\partial\pi)^2$$

$$\mathcal{L}_3 = (\partial\pi)^2 \Box\pi$$

$$\mathcal{L}_4 = \partial_\mu \pi^I \partial_\nu \pi_I \left(\partial^\mu \partial_\rho \pi^J \partial^\nu \partial^\rho \pi_J - \partial^\mu \partial^\nu \pi^J \Box \pi_J\right) + \cdots$$

$$\mathcal{L}_5 = \cdots$$

Interesting Mathematical Aside

The single field Galileon constitutes an example of what is known to mathematicians as an *Euler Hierarchy* [Thanks to David Fairlie]

Suppose have Lagrangian only depending on derivative:

$$L_1 = L_1(\dot{\phi}) \longrightarrow \mathcal{E}_1 = 0$$

$$L_2 = L_1 \mathcal{E}_1 \longrightarrow \mathcal{E}_2 = 0$$

$$L_3 = L_2 \mathcal{E}_2 \longrightarrow \mathcal{E}_3 = 0$$

$$\vdots$$

$$L_n = L_{n-1} \mathcal{E}_{n-1}$$

(total derivative)

Second order equations of motion, and series eventually terminates, as the Galileon one does

Can we Trust Large Derivatives?

- Galileon theory nonrenormalizable - effective theory.
- (Will see soon that nevertheless nonrenormalized)
- Still must worry about quantum effects in such theories
- Typically, large derivatives lead to strong coupling

- Structure of one-loop effective action

$$\Gamma \sim \sum_m \left[\Lambda^4 + \Lambda^2\partial^2 + \partial^4 \log\left(\frac{\partial^2}{\Lambda^2}\right)\right]\left(\frac{\partial\partial\pi}{\Lambda^3}\right)^m$$

Tree-level - strength of classical nonlinearities measured by

$$\alpha_{cl} \equiv \frac{\partial\partial\pi}{\Lambda^3}$$

On other hand, factoring two powers from effective action

$$\Gamma \sim \sum_{m'} \left[\alpha_q + \alpha_q^2 + \alpha_q^3 \log \alpha_q\right] \partial\pi\partial\pi \left(\frac{\partial\partial\pi}{\Lambda^3}\right)^{m'}$$

So: quantum effects suppressed relative to classical ones by

$$\alpha_q \equiv \frac{\partial^2}{\Lambda^2}$$

So there is a separation of scales

- Allows for regimes in which exist classical field configurations with non-linearities of order one
- But which satisfy a_q<<1 - so quantum effects under control.
- So can study non-linear classical solutions involving galieon terms, and trust solutions

Nonrenormalization!

Remarkable fact about these theories (c.f the SUSY theories I discussed yesterday)

Expand quantum effective action for the classical field about expectation value

$$\Gamma(\pi^c) = \Gamma^{(2)}\pi^c\pi^c + \Gamma^{(3)}\pi^c\pi^c\pi^c + \cdots$$

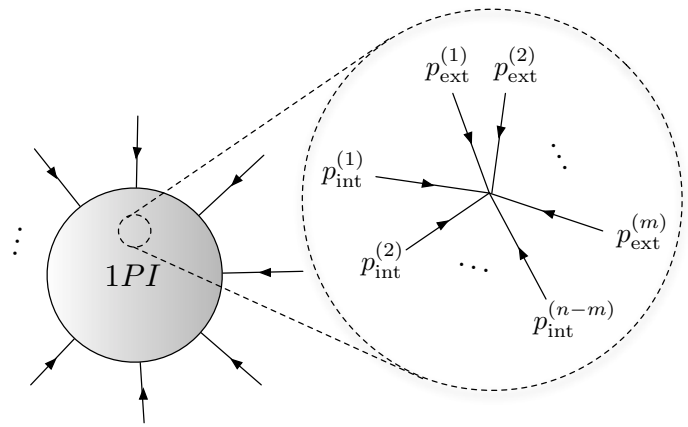

Computing Feynman diagrams - terms of the galilean form cannot receive new contributions. At all loops in perturbation theory, any number of fields!

(Hinterbichler, Wesley & M.T., 2010)

Useful?

Fields that can maintain their small couplings are often naturally useful for inflation or dark energy!

Work just really underway on this, possibly very interesting in future:

(e.g. Burrage, de Rham, Seery and Tolley 2010)

Galileon inflation - radiatively stable higher derivative inflation model - operators which are protected by a covariant version of Galileon symmetry.
Potential test via larger than usual nongaussianity

With Hinterbichler and Wesley have recently extended these models to many extra dimensions and multi Galileons

It is early days though

(Hinterbichler, Wesley & M.T., 2010)

Beyond DGP

- Seems natural to consider extending to higher dimensions
- Several potential advantages of this
  - Might cure some of the ghost problems
  - Observations - stringent constraints on DGP model. In higher dimensions modifications to Friedmann equation should be milder - allow wider param range
  - Degravitation: gravity acts as a high-filter, suppressing contribution of vacuum energy to gravitational field. Too weak in DGP, more hopeful in D>5.

$$G_{\mu\nu} = 8\pi G T_{\mu\nu} \longrightarrow G^{-1}(\Box) G_{\mu\nu} = 8\pi T_{\mu\nu}$$

Cascading Gravity

(de Rham, Dvali, Khoury, Hofmann, Pujolas, Redi & Tolley, *Phys. Rev. Lett.100 251603 (2008)*

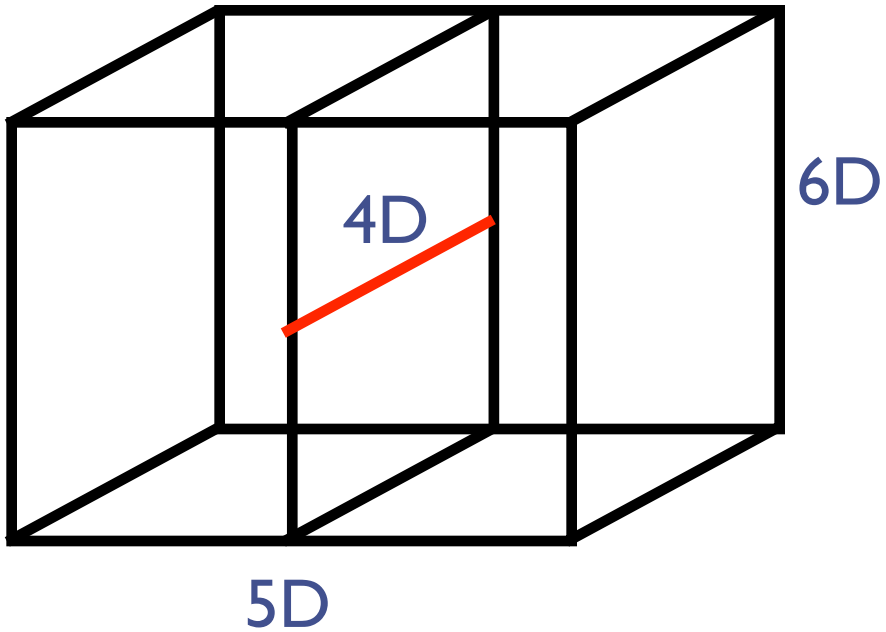

Cascading gravity

6D → 5D → 4D

This setup has recently been shown to be ghost free!
But what is its cosmology?

Cosmology is Very Difficult!

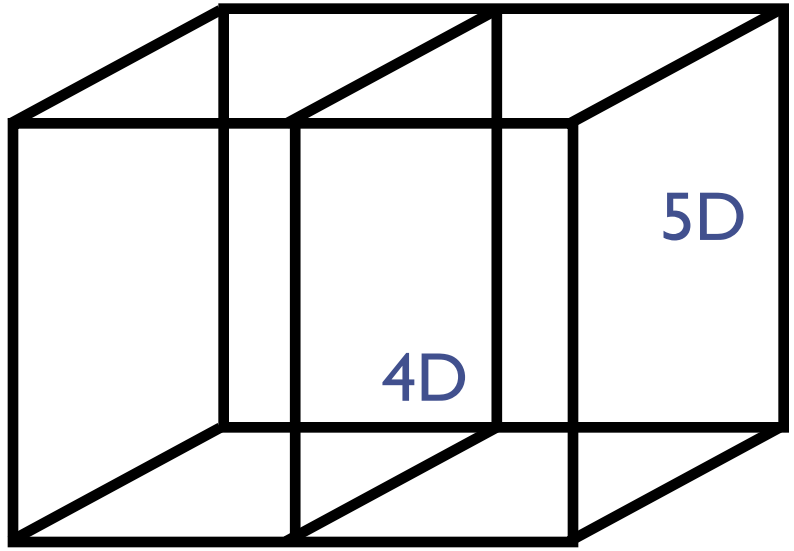

- In codimension-1, entire effects of bulk dynamics on the brane due to projected Weyl tensor
- Conformal nature of Weyl tensor translates into the conformal nature of the new effective matter content on the brane: *dark radiation*.

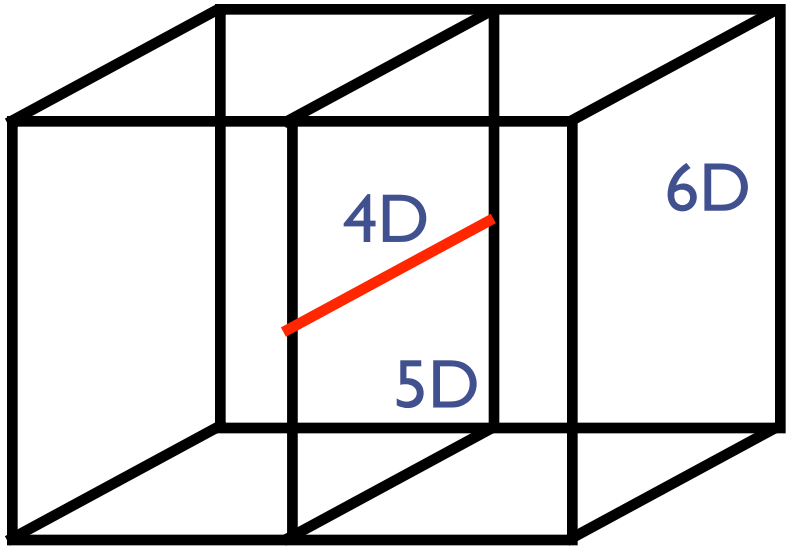

- Beyond 5D, in principle need to solve for the entire bulk dynamics to understand the effects on the brane.

(Chatillon, Macesanu and M.T., Phys. Rev. D74 124004 (2006))

- This is difficult, to say the least.

Cascading Cosmology

(Agarwal, Bean, Khoury & M.T., [arXiv:0912.3798 [hep-th]], *Phys. Rev.* **D** (2010))

Have recently completed a (rather technical) first analysis of some cosmological solutions to cascading gravity

- Will <u>not</u> inflict the details on you here
- Developed a fully covariant 5D effective action through a 6D decoupling limit
- Theory contains an additional scalar (brane-bending mode), with a very special Lagrangian that you'll find familiar

$$S = \frac{M_5^3}{2}\int d^5x\sqrt{-g_5}\left[e^{-3\pi/2}R_5 - \frac{27}{16m_6^2}(\partial\pi)^2\Box_5\pi\right] + \int d^4x\sqrt{-g_4}\left[\frac{M_4^2}{2}R_4 + \mathcal{L}_{matter}\right]$$

Cosmology on the Brane

- Ideally, combine junction conditions w/ field equations to obtain Friedmann equation on the brane.
- For general cosmological metric turns out to be formidable.
- Instead work in the static bulk limit
  - 3-brane moving through a stationary 5d bulk.
  - Motion of the brane in static bulk induces cosmological brane dynamics.

Use a static 5d metric of the form

$$ds^2 = -n^2(\tau, y)d\tau^2 + a^2(\tau, y)\delta_{ij}dx^i dx^j + b^2(\tau, y)dy^2$$

$$\equiv N^2 dy^2 + g_{\mu\nu}(dx^\mu + N^\mu dy)(dx^\nu + N^\nu dy)$$

Position of the brane y=y(τ); metric valid on y>y(τ); reflection valid on the y<y(τ) parts.

Cascading Cosmology

(Agarwal, Bean, Khoury & M.T., [arXiv:0912.3798 [hep-th]], to appear in *Phys. Rev.* **D** (2010))

- Derived cosmological evolution on our 3-brane
- Found the cascading model can generate an accelerating solution, but develops a critical singularity preventing sufficient acceleration.
- Suggests there may be more general solutions with cosmic acceleration without a cosmological constant

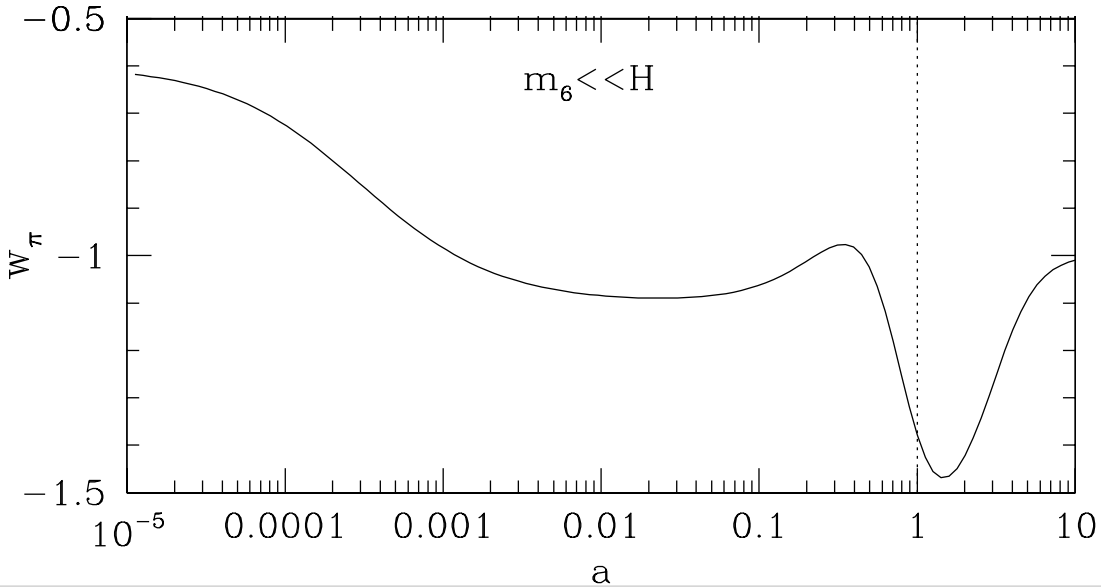

Final Comments

- As Ed described, cosmic acceleration has prompted a new era of testing gravity on all scales.
- Many of the theoretical ways to modify gravity in 4d are tightly constrained.
- Extra dimensions provide one playground in which new models can be found, and may lead us to new approaches in 4d
- Indeed, higher dimensional models provide an interesting setting to approach both the cosmological constant problem and the broader issue of cosmic acceleration.

Final Comments

- Initial work on induced gravity - the DGP model, already yielded interesting acceleration possibilities.
- Here I've described two directions the emerged
    - The Galileon models - new 4d effective field theories with symmetries that may help for both dark energy and inflation.
    - Higher dimensional induced gravity models - may provide a setting for degravitation and for successful accelerating cosmology.
- Much work remains to be done to see if viable
- There is room for real theoretical advances here.

Thank You

Thanks to our organizers for a wonderful week, to the staff for making it run so smoothly, and to you all for a stimulating and interactive meeting.